KE-AS3115R-CMW

Excellence Series intelligent addressable sounder/visual alarm w/ isolator, ceiling mount

General

The innovative Excellence range of intelligent addressable devices offers advanced features for reliability and peace of mind. Coupled with features for ease of installation and maintenance on new fire detection systems, it's a perfect match for exceptional overall performance.

The KE-AS3115R-CMW is a RED bodied, ceiling mount sounder & white flash visual alarm device (VAD) with integrated isolation for Excellence series fire systems. They are connected over a 2-wire loop and are loop powered. They are compatible with automatic synchronisation controlled from the CIE (control panel).



Installation

For ease of system planning, Excellence notification devices share a first fix base with Excellence point detectors. This allows for standardised cabling with less cabling issues, and allows devices to be interchanged without rewiring should requirements change. Optional installation accessories to support surface conduit entry, trim skirts address tags and address labels are available to suit multiple applications.

To assist with the installation and commissioning process, a multitude of features ensure that the device is easily and properly inserted into the base, securely connected to the loop and that it functions perfectly. Local multi-coloured LED indicators help visualise any problems locally without requiring access to the fire panel.

Configuration & Operation

All functional programming is controlled from the CIE and can be changed on the fly without access to the device.

Should the loop be heavily loaded, all Excellence notification devices offer a unique "Battery assisted activation" feature allowing the device to draw its activation power from 3 x CR123 batteries that may be optionally fitted to the device. Using batteries protects the device loop from possible overload which may put the system at risk, and allows for as many as 128 notification devices to be fitted to any Excellence loop. When batteries are used they are automatically supervised buy the device, with ample warning time when batteries require replacing. Under standard operating conditions batteries should provide more than 5 years of support without requiring replacement.

Safety & Security

Automatic daily self testing ensures that when the device is activated, everything works as expected. Pre-activation self testing ensures that a warning is raised before an event takes place, minimising the risk when notification is required. With the integrated isolator, continuity of operation is ensured even with a single short circuit on the loop.

Details

- Standard first fix base shared with point detectors for ease of planning, logistics and installation
- Integrated short circuit loop isolation for added safety protection
- Base lock, address tag, trim skirt and surface cabling support for easy installation in all conditions
- Loop powered with battery assisted activation allowing up to 128 devices per loop
- 32 selectable tones at 4 selectable volume levels that can be reconfigured from the CIE
- 3 selectable VAD power levels that can be reconfigured from the CIE
- Multi-stage evacuation support for application flexibility
- Pre-and post activation self testing ensuring maximum safety
- Automatic synchronisation
- Tri-colour diagnostic LED indicator for fast commissioning and fault finding support

KE-AS3115R-CMW

Excellence Series intelligent addressable sounder/visual alarm w/ isolator, ceiling mount

Technical specifications

General

Compatibility	Kidde Commercial Excellence Systems
Addressing method	DIL switch
Monitoring	Activated, Battery level, Continuously self-checking, Fault, Open circuit, Short circuit

Electrical

Power supply type	Batteries, Loop powered
Batteries	3 x CR123 (optional)
Operating voltage	17 to 29 VDC
Communication voltage	4 to 11 V pulsed
Current consumption	250 µA (Quiescent) 1.4 mA (Activated - from the loop with batteries installed) Refer to installation sheet for consumption values when only loop powered

Sounder

Output level	55 to 102 dB(A) - Tone dependent
Output level adjustment	4 levels
Frequency	User selectable
Selectable tones	32
Synchronization	Supported
No. of stages	3

VAD

Colour	White
Rating	C-3-6 (Low) / C-3-7.5 (Mid) / C-3-9 (High)
Floor coverage	< 63.6 m² total < 40.5 m² covering squares
Flash frequency	1 Hz (1 flash every 1 s)
Synchronization	Supported

Isolation

Type	Negative line break
Loop current	5 mA (isolated)
Series resistance	<0.08 Ω
Switch current	1.05 A (continuous) / 1.4 A (pulsed)
Leakage current	<1 mA
Isolation voltage	14 to 15.5 VDC
Reconnect voltage	14 to 15.5 VDC

Physical

Physical dimensions	111 x 87 mm (Ø x H)
Net weight	300 g
Colour	Red (RAL 3001)
Mounting type	Ceiling mount
Mounting position	Ceiling
Mounting height	Up to 3 m
Mounting base	Shallow
Material	PC / ABS
Texture	Smooth

Environmental

Vandal proof	No
Operating temperature	-10 to +55°C
Storage temperature	-25 to +70°C
Relative humidity	5 to 95% noncondensing
Environment	Indoor
IP rating	IP21C

Regulatory

Compliancy	CE, REACH, RoHS 3, WEEE
Certification	EN54-17, EN54-23, EN54-3

Compatible products

Category	Reference	Description
Detection device	KE-ASA-AUXR	Intelligent addressable notification accessory - deep base (red)
Detection device	KE-DB3010W	Excellence series intelligent device accessory - standard base

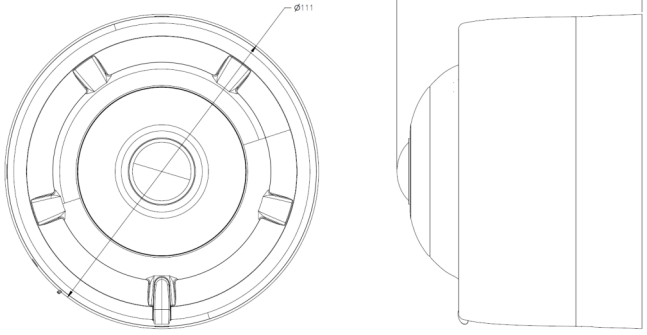

KIDDE COMMERCIAL

As a company of innovation, Kidde Global Solutions reserves the right to change product specifications without notice. For the latest product specifications, visit firesecurityproducts.com online or contact your sales representative.

Last updated on 28 August 2026 - 16:47