TVW-BB1-W

TruVision wedge camera back box used with S6 series of wedge cameras, white

Overview

TVW- BB1 back box for indoor and outdoor use. The bracket can be used with the TruVision wedge cameras listed below.

Used for the following cameras

TruVision S6 wedge range of IP cameras:
TVW-5601
TVW-5602
TVW-5603
TVW-5604
TVW-5605



Details

- Suitable for TruVision S6 wedge S6 wedge cameras
- Back box
- Aluminum alloy

TVW-BB1-W

TruVision wedge camera back box used with S6 series of wedge cameras, white

Technical specifications

General

Bracket type	Camera
Support type	TruVision wedge domes
Bracket mounting part	Mount connection box
Mount type	Back box
Cable management	Yes

Physical

Physical dimensions	120 x 150.74 x 37.22 (Ø 120 mm)
Net weight	240 g
Colour	White
Material	Aluminium

Regulatory

Compliancy	CE

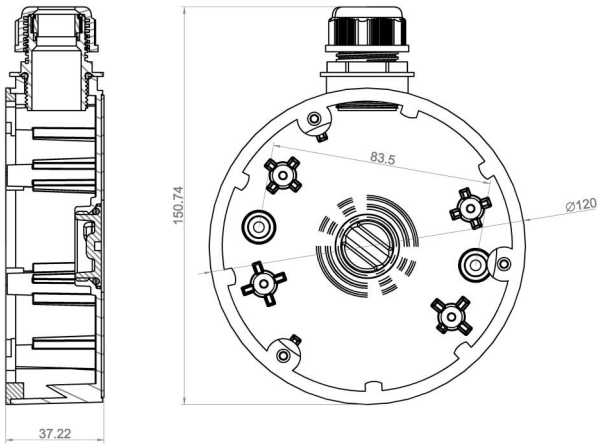

As a company of innovation, Kidde Global Solutions reserves the right to change product specifications without notice. For the latest product specifications, visit firesecurityproducts.com online or contact your sales representative.

Last updated on 28 August 2026 - 10:51