TVP-PMB-03

TruVision PTZ Pendant Mount bracket

General

The TruVision TVP-PMB-03 pendant mount bracket can be used to install IP PTZ cameras on a ceiling.



Details

- Pendant mount bracket to be mounted on horizontal ceiling
- Compatible with selected PTZ cameras

TVP-PMB-03

TruVision PTZ Pendant Mount bracket

Technical specifications

General

Bracket type	Kamera
Support type	PTZ-Kamera
Bracket mounting part	Montagehalterung
Mount type	Hängende Montage
Cable management	Yes

Physical

Physical dimensions	117 x 117 x 105 mm
Net weight	750 g
Colour	Grau
Material	Aluminiumlegierung und Stahl

Environmental

Environment	Drinnen, Draussen

Compatible products

Category	Reference	Description
Camera	TVGP-P02-0401-PTZ-G	TruVision 4MP IP PTZ camera, H.265+, 300m IR, 25x zoom, Super Low Light, IP67, IK10, NEMA 4X, Hi-PoE/36VDC
Camera	TVGP-P02-0402-PTZ-G	TruVision 4MP IP PTZ camera, H.265+, 400m IR, 42x zoom, Super Low Light, IP67, IK10, NEMA 4X, Hi-PoE/36VDC

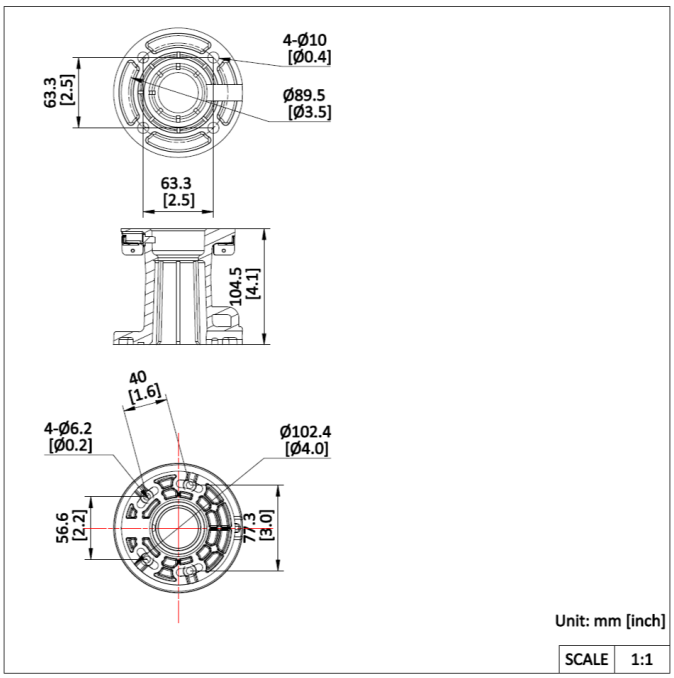

As a company of innovation, Kidde Global Solutions reserves the right to change product specifications without notice. For the latest product specifications, visit firesecurityproducts.com online or contact your sales representative.

Last updated on 24 August 2026 - 15:23