Z-RL4

Remote LED Indicator - Square

General

The Z-RL4 is a flush mount conventional remote indicator designed for connection to conventional or addressable fire alarm detectors. I features a high intensity red LED indicator positioned centrally on a white square plastic moulding.

For surface mount applications a suitable back box is optionally required.

Application

The siting of detectors in confined or concealed spaces often result in the alarm indicator on the detector itself becoming obscured or hidden. In order to clearly show the state of a detector when installed in areas such as ceiling or floor voids, a remote LED indicator can be wired to the detector base and installed in any prominent position.

The Z-RL4 is designed to fit onto a standard recessed or surface mounting square conduit box and may be connected with standard fire alarm cable to the detector base. Terminals are provided all Ziton conventional and addressable fire alarm detector bases for connection of this unit.



Details

- High intensity red LED indication
- Fits onto a standard conduit box
- Compatible with all ZC and ZP bases

Z-RL4
Remote LED Indicator - Square

Technical specifications

General

Compatibility	Ziton conventional and addressable devices that support a remore LED connection

Electrical

Operating voltage	24 VDC
Current consumption	15 mA (Alarm) 0 (Quiescent)
Cable specification	2 wire

VAD

Colour	High intensity red LED

Physical

Physical dimensions	85 x 85mm x 26mm (W x H x D)
Net weight	24 g
Colour	Weiß
Mounting type	Versenkte Montage, Oberflächenmontage
Material	Geformtes ABS
Mounting	Surface or recessed with standard single gang conduit box

Environmental

Operating temperature	-20 to +70ºC
Relative humidity	20 to 95% noncondensing
Environment	Drinnen
IP rating	IP32 (EN60529 rating)

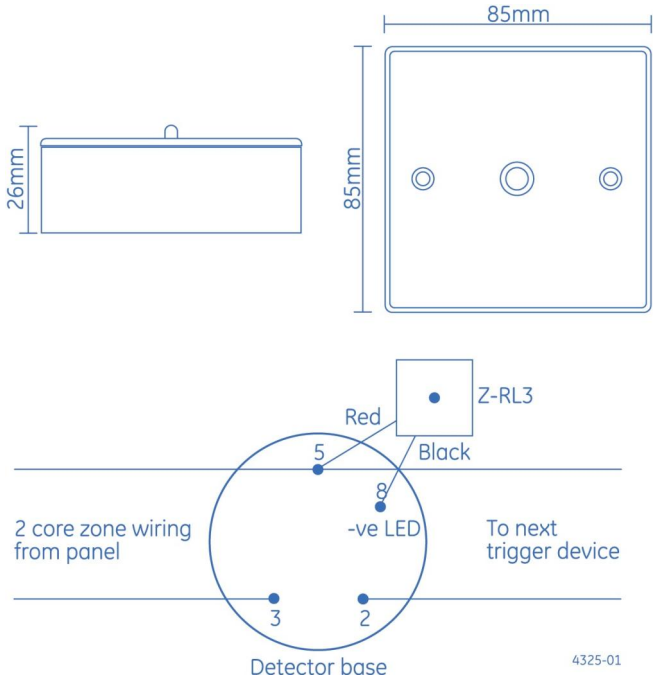

KIDDE GLOBAL SOLUTIONS

As a company of innovation, Kidde Global Solutions reserves the right to change product specifications without notice. For the latest product specifications, visit firesecurityproducts.com online or contact your sales representative.

Last updated on 7 April 2025 - 15:31