TVP-WM-CM

TruVision PTZ dome corner mount adapter

Overview

The TVP-WM-CM allows for a more efficient installation for corner mount PTZ installations. Such a corner mount installation allows a single PTZ camera to cover a wider field of view compared to a standard wall mount bracket.
The TVP-WM-CM can be conbined with the TVP-WMB or GEA-102 TruVision PTZ brackets.

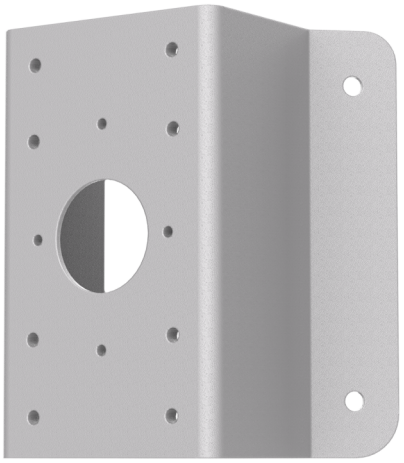

Details

- TruVision PTZ corner mount adapter
- Compatible with TVP-WMB and GEA-102
- Fits 90° corners

TVP-WM-CM

TruVision PTZ dome corner mount adapter

Technical specifications

General

Bracket type	Caméra
Support type	PTZ Kamera, TruVision beslag
Bracket mounting part	Monteringsadapter
Mount type	Hjørne beslag
Cable management	No

Physical

Physical dimensions	194 x 176 x 109 mm 7.63 x 6.93 x 4.29 in.
Net weight	1548 g 3.41 lbs.

Compatible products

Category	Reference	Description
Brackets & Mounts	TVP-WMB	TruVision PTZ dome wall mount bracket

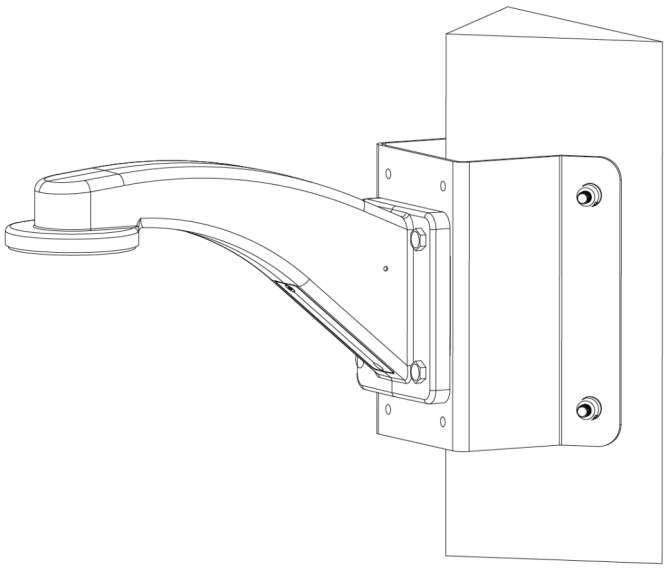

As a company of innovation, Kidde Global Solutions reserves the right to change product specifications without notice. For the latest product specifications, visit firesecurityproducts.com online or contact your sales representative.

Last updated on 27 August 2026 - 20:21