TVP-WM-PM

TruVision PTZ dome pole mount adapter

Overview

The TVP-WM-PM is a pole mount accessory to be used in combination with the TVP-WMB or GEA-102. This pole mount accessory allows for a PTZ camera to be mounted onto a pole and can provide the user with a greater field of view when observing large areas.

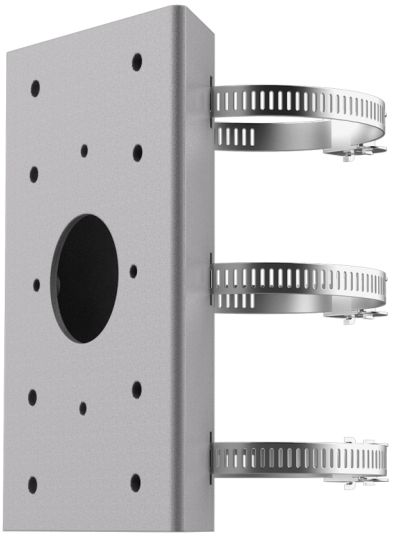

Details

- Pole mount adapter for TruVision PTZ brackets
- Compatible with TVP-WMB or GEA-102

TVP-WM-PM

TruVision PTZ dome pole mount adapter

Technical specifications

General

Bracket type	Caméra
Support type	PTZ Kamera, TruVision beslag
Bracket mounting part	Monteringsadapter
Mount type	Stangmontering
Cable management	No

Physical

Physical dimensions	194 × 126 × 46 mm 7.64 × 5.06 × 1.81 in.
Net weight	1178 g 2.6 lb.

Compatible products

Category	Reference	Description
Brackets & Mounts	TVP-WMB	TruVision PTZ dome wall mount bracket

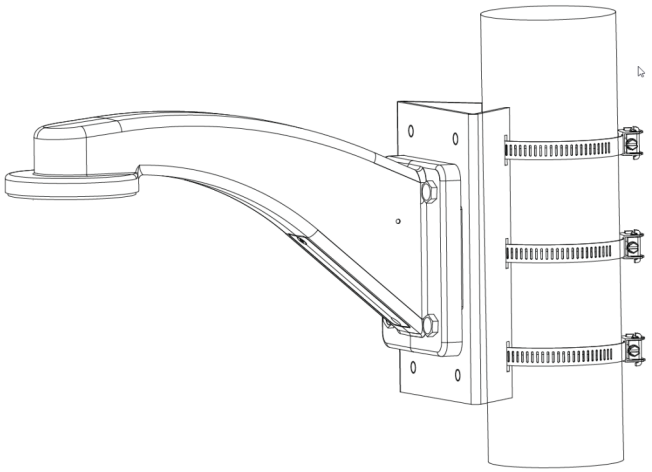

As a company of innovation, Kidde Global Solutions reserves the right to change product specifications without notice. For the latest product specifications, visit firesecurityproducts.com online or contact your sales representative.

Last updated on 27 August 2026 - 20:16