KIDDE™ COMMERCIAL

# ZP732-2P

**ZP7 Series Addressable Dual Detector (Optical & Heat) , Polar White**



# ZP732-2P

## ZP7 Series Addressable Dual Detector (Optical & Heat) , Polar White

## Tekniska specifikationer

### General

| | |
|---|---|
| Addressing method | DIP Switches |

### Detection

| | |
|---|---|
| Monitoring | Device type, Open circuit, Presence, Short circuit |

### Physical

| | |
|---|---|
| Colour | Branco polar |
| Mounting type | Montagem na base |
| Material (body) | Støbt ABS |

### Environmental

| | |
|---|---|
| Vandal proof | No |
| Environment | Indendør |

### Regulatory

| | |
|---|---|
| Compliancy | CE, REACH, RoHS 2, WEEE |
| Certification | CPR |

### Kompatibla produkter

| Kategori | Referens | Beskrivning |
|---|---|---|
| Detection device | 11510-ZT | ZPL1-1 ADD.LABEL 1001-1127 |
| Detection device | 11520 | Zpl1-2 Add.Label 2001-2127 |
| Detection device | 11530-ZT | ZPL1-3 ADD.LABEL 3001-3127 |
| Detection device | 11540-ZT | ZPL1-4 ADD.LABEL 4001-4127 |
| Detection device | ZP7-IB2-P | Ziton series point detector base with isolator |
| Detection device | ZP7-RB1-P | Recess Mount Detector Base (Polar White) |
| Detection device | ZP7-SB1-P | Surface Mount Detector Base (Polar White) |
| Notification device | 122301 | Z-RL3 Remote LED w/ "Fire" Text, Square |
| Notification device | Z-RL4 | Remote LED Indicator - Square |

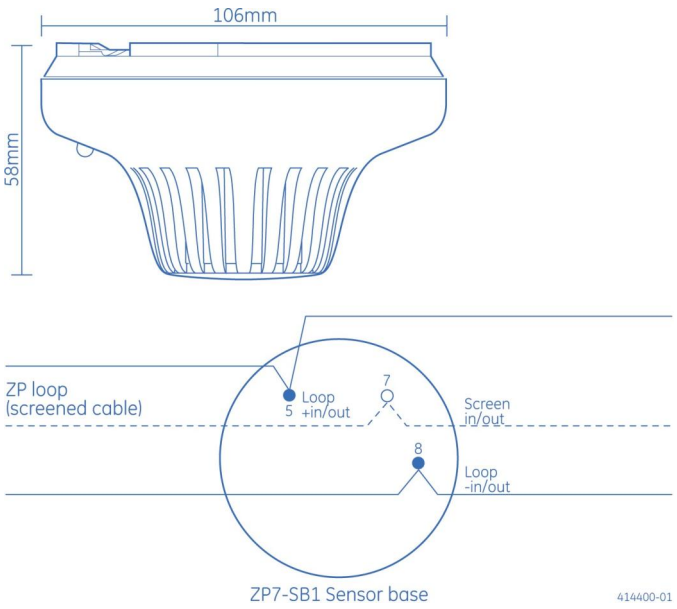


Kidde Global Solutions förbehåller sig rätten att ändra produktspecifikationer utan föregående meddelande. För de senaste produktspecifikationerna, besök se.firesecurityproducts.com online eller kontakta din försäljningsrepresentant.

Last updated on 12 November 2026 - 18:57