# S40-2SLC-10

## 10G SFP Transceiver Module (1310nm) - 10 km - Single Mode

### Overview

The IFS family of Small Form-factor Pluggable (SFP) Transceiver Modules are designed for high performance integrated duplex data transmission over optical fiber. These SFP transceiver modules are compliant with the industry's SFP Multi-source Agreement (MSA) standard.

The IFS SFP Transceiver Modules offer the ability to enable the SFP ports on any Ethernet equipment that have a built-in SFP Mini-GBIC interface. These modules are hot-swappable without any interruption of the host equipment operation.

These SFP modules are available in 100Base-FX/BX or 1000Base-TP/FX/BX confi gurations allowing for use of either one fi ber or two fi ber transmission over single mode or multi-mode optical fi ber. The 10 Gigabit SFP+ modules
are available for single mode and multi-mode fi ber for use in IFS switches that support 10G SFP+ slots for highbandwidth switch trunking and communication links.

Additionally, certain SFPs are available as wide-temperature versions for use in industrial equipment deployed in harsh environments.



### Details

- 10G optical uplink
- SFP multi-source agreement compliant
- Up to 10 km transmission distance on single mode fiber
- Class 1 laser safety standard IEC 60825 compliant
- LC duplex receptacle
- Low power dissipation
- Plug-and-play capability for easy installation
- Hot Pluggable
- 0ºC to +70ºC operation temperature
- TTL signal detect indicator
- Single power supply 3.3V

# S40-2SLC-10

## 10G SFP Transceiver Module (1310nm) - 10 km - Single Mode

## Technical specifications

### General

| | |
|---|---|
| Category | SFP |
| Port type | Enkelt Tilstand |
| No. of fibers | 2 |
| Port speed | 10G |
| Wavelength | 1310 nm |
| Maximum distance | 10 km |
| Reliability (MTBF) | >50,000 hrs @ 25°C |

### Electrical

| | |
|---|---|
| Operating voltage | 3.3 VDC |

### Physical

| | |
|---|---|
| Physical dimensions | 59 x 15 x 12.4 mm (W x D x H)<br>2.20 x 0.59 x 0.49 in. (W x D x H) |
| Net weight | 18 g<br>0.6 oz |

### Environmental

| | |
|---|---|
| Operating temperature | 0 to 70°C |
| Storage temperature | -40 to 85°C |
| Relative humidity | 5 to 95% noncondensing |

### Regulatory

| | |
|---|---|
| Compliancy | CE, FCC |
| | Class 1 laser product complies with EN 60825-1 |

### Transmitter Electro-Optical Interface

| | |
|---|---|
| EMI | EN 55022 CLASS A:2006+A1 : 2007 / EN61000-3-2:2006 / EN61000-3-3: 1995+A1:2001+A2:2005 |
| Optical output power | -8.0 dBm (avg.) |
| Power budget | 10 dB |

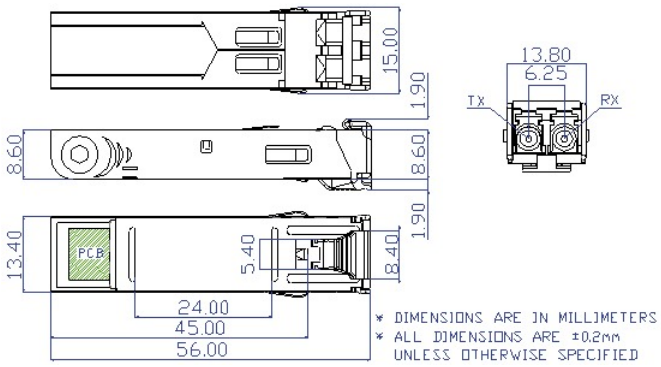


As a company of innovation, Kidde Global Solutions reserves the right to change product specifications without notice. For the latest product specifications, visit firesecurityproducts.com online or contact your sales representative.

Last updated on 16 June 2026 - 15:24