KIDDE™ COMMERCIAL

ZP730-2P

ZP7 Series Addressable Optical Detector



ZP730-2P

ZP7 Series Addressable Optical Detector

Technische specificaties

General

Addressing method	DIP Switches

Electrical

Power supply type	Alimentado por loop

Physical

Colour	Sinal branco (RAL 9003)
Mounting type	Montagem na base
Material (body)	Støbt ABS

Environmental

Vandal proof	No
Environment	Indendør

Regulatory

Compliancy	CE, REACH, RoHS 3, WEEE
Certification	CPR

Compatibele producten

Categorie	Referentie	Beschrijving
Detection device	11510-ZT	ZPL1-1 ADD.LABEL 1001-1127
Detection device	11520	Zpl1-2 Add.Label 2001-2127
Detection device	11530-ZT	ZPL1-3 ADD.LABEL 3001-3127
Detection device	11540-ZT	ZPL1-4 ADD.LABEL 4001-4127
Detection device	ZP7-IB2-P	Ziton series point detector base with isolator
Detection device	ZP7-RB1-P	Recess Mount Detector Base (Polar White)
Detection device	ZP7-SB1-P	Surface Mount Detector Base (Polar White)
Notification device	122301	Z-RL3 Remote LED w/ "Fire" Text, Square
Notification device	Z-RL4	Remote LED Indicator - Square

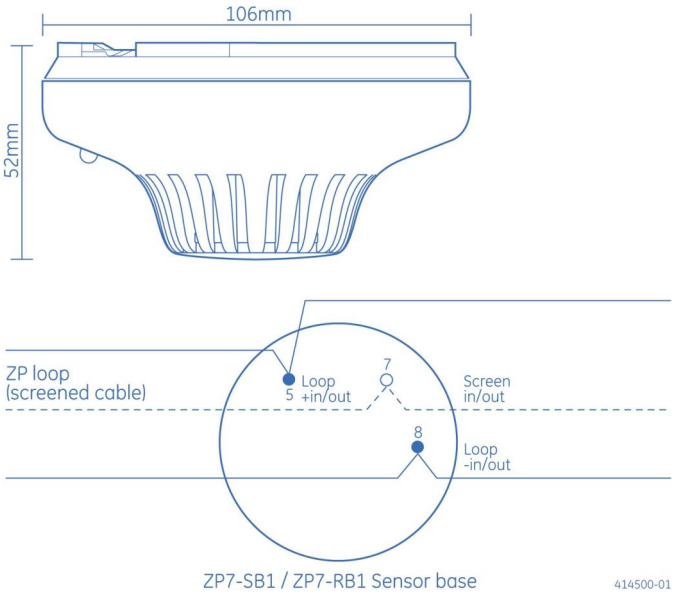

Als een bedrijf van innovatie behoudt Kidde Global Solutions zich het recht voor productspecificaties zonder kennisgeving te wijzigen. Ga voor de nieuwste productspecificaties online naar be.firesecurityproducts.com of neem contact op met uw verkoopvertegenwoordiger.

Last updated on 12 November 2026 - 18:57