S25-2MLC-2

SFP-Port 100Base-FX Mini GBIC Transceiver (1310nm) - 2Km - MM - WideTemperature

Overview

The KGS Fire & Security transceiver module is specifically designed to accommodate high-performance optical fiber, including integrated duplex data link over multi mode. Compliant with the SFP Multisource Agreement (MSA), these transceiver modules feature hot-plug capability for easy installation without interrupting host equipment operating online. The SFP Mini GBIC transceiver can install into KGS Fire & Security switch products with 100Base-FX or 1000Base-SX/LX SFP interface.



Details

- SFP multi-source agreement compliant
- Data rate 100Mbps
- Class 1 laser safety standard IEC 60825 compliant
- LC duplex receptacle
- Low power dissipation
- Plug-and-play capability for easy installation
- Hot Pluggable
- -40ºC to +75ºC operation temperature
- TTL signal detect indicator
- Single power supply 3.3V
- Comply with the IEEE 802.3ab

S25-2MLC-2

SFP-Port 100Base-FX Mini GBIC Transceiver (1310nm) - 2Km - MM - WideTemperature

Technical specifications

General

Category	SFP
Port type	Multi Tilstand
No. of fibers	2
Port speed	Hurtig
Wavelength	1310 nm
Maximum distance	2 km
Connector	LC
PHY type	100Base-FX
Power (dBm)	-20 to -14
RX Sen. (dBm)	-32
Power budget	12
Reliability (MTBF)	>50,000 hrs @ 25°C

Electrical

Operating voltage	3.3 VDC
AS/NZS CISPR 22	2006

Physical

Physical dimensions	59 x 15 x 12.4 mm (W x D x H) 2.20 x 0.59 x 0.49 in. (W x D x H)
Net weight	18g 0.6 oz

Environmental

Operating temperature	-40 to +75°C
Storage temperature	-40 to 85° C
Relative humidity	5% to 95% noncondensing

Transmitter Electro-Optical Interface

EMI	EN 55022 CLASS A:2006+A1 : 2007 / EN61000-3-2:2006 / EN61000-3-3: 1995+A1:2001+A2:2005
Optical output power	Min. : -20 dBm, Typical : - , Max. : -14 dBm
Receiver	-32 dBm

Regulatory

	IEEE 802.3ab Fast Ethernet Standard
	Class 1 laser product complies with EN 60825-1

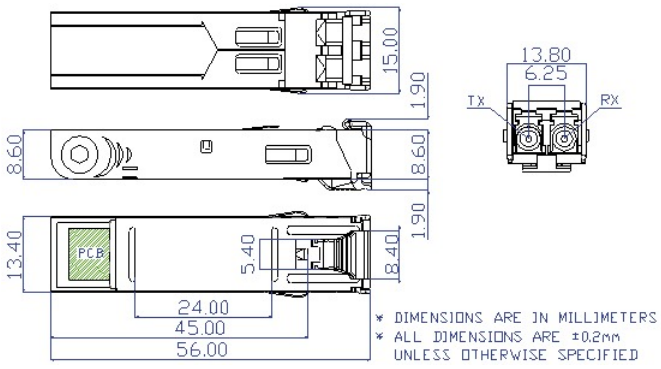

As a company of innovation, Kidde Global Solutions reserves the right to change product specifications without notice. For the latest product specifications, visit firesecurityproducts.com online or contact your sales representative.

Last updated on 16 June 2026 - 15:24